Sand/Oil Interceptor Standard Details

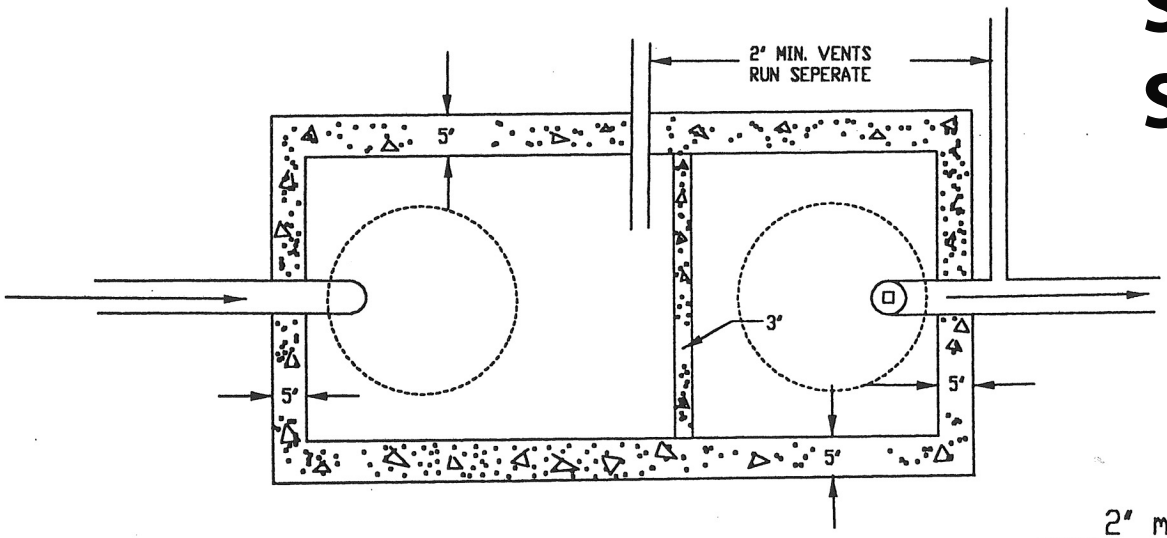

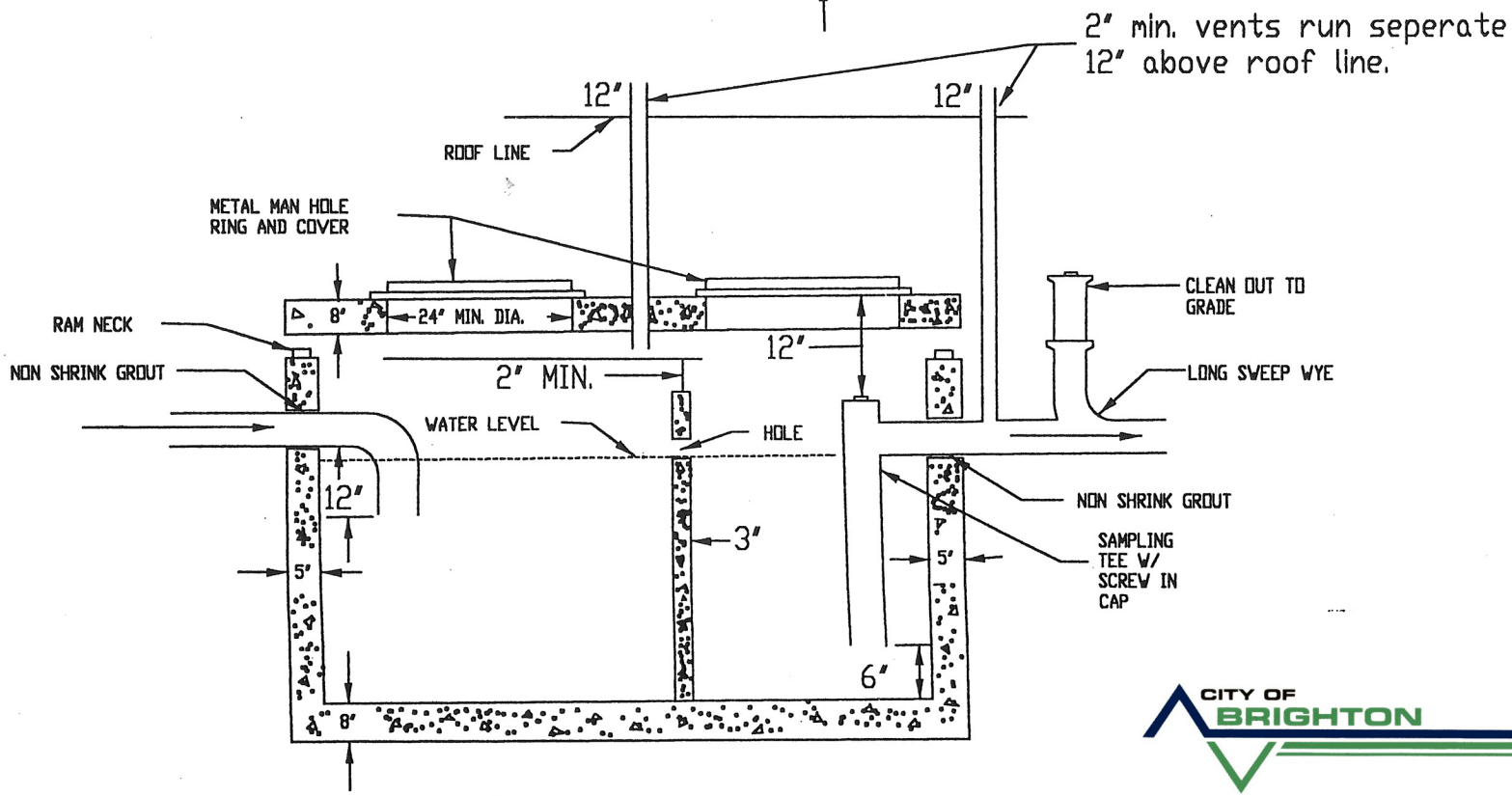

CITY OF BRIGHTON